OFN400-FR

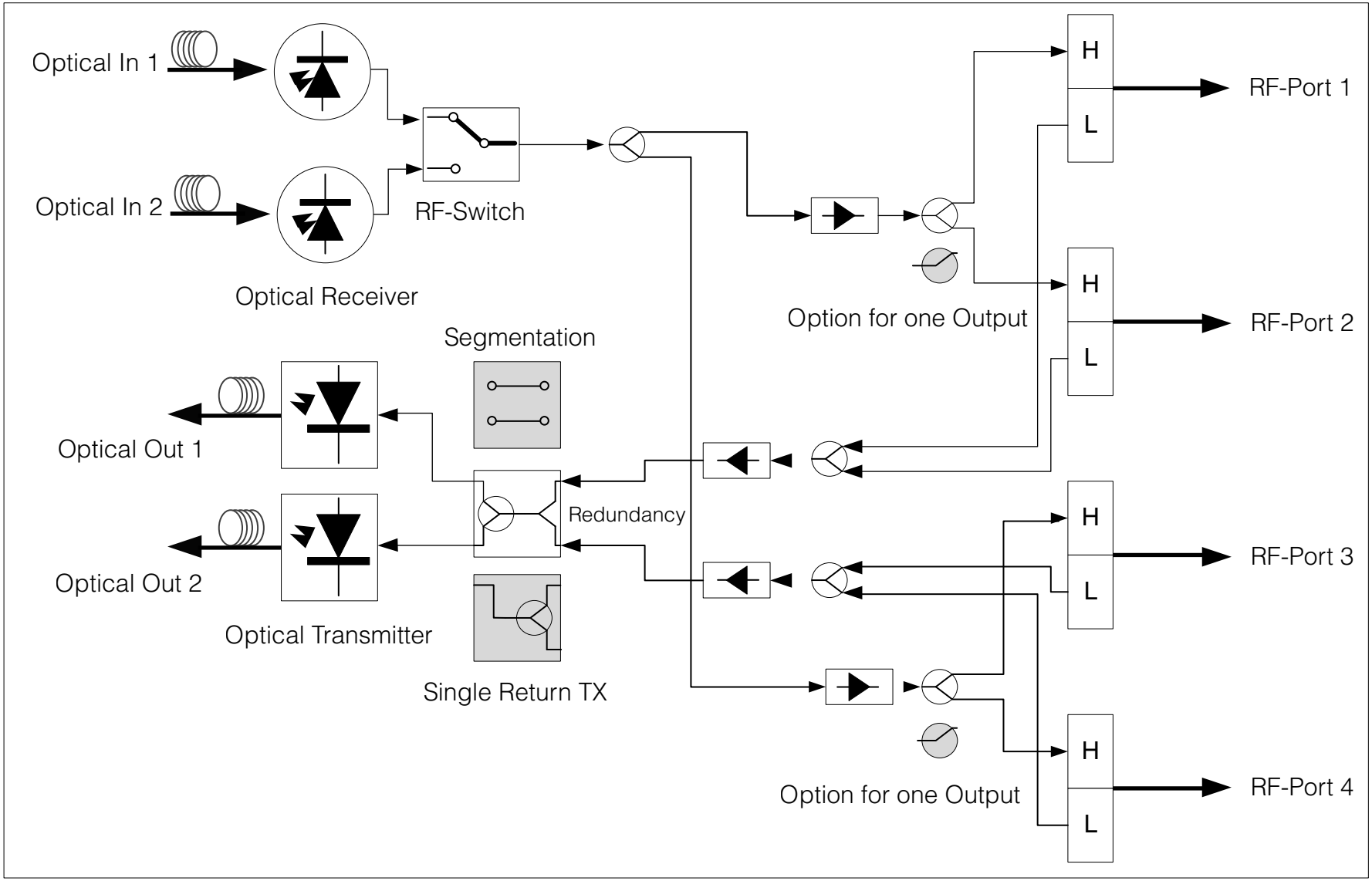
Optical In 1
Optical In 2
Optical Receiver
RF-Switch
Segmentation
Optical Out 1
Optical Out 2
Optical Transmitter
Redundancy
Single Return TX
Option for one Output
Option for one Output
H
L
H
L
H
L
H
L
RF-Port 1
RF-Port 2
RF-Port 3
RF-Port 4